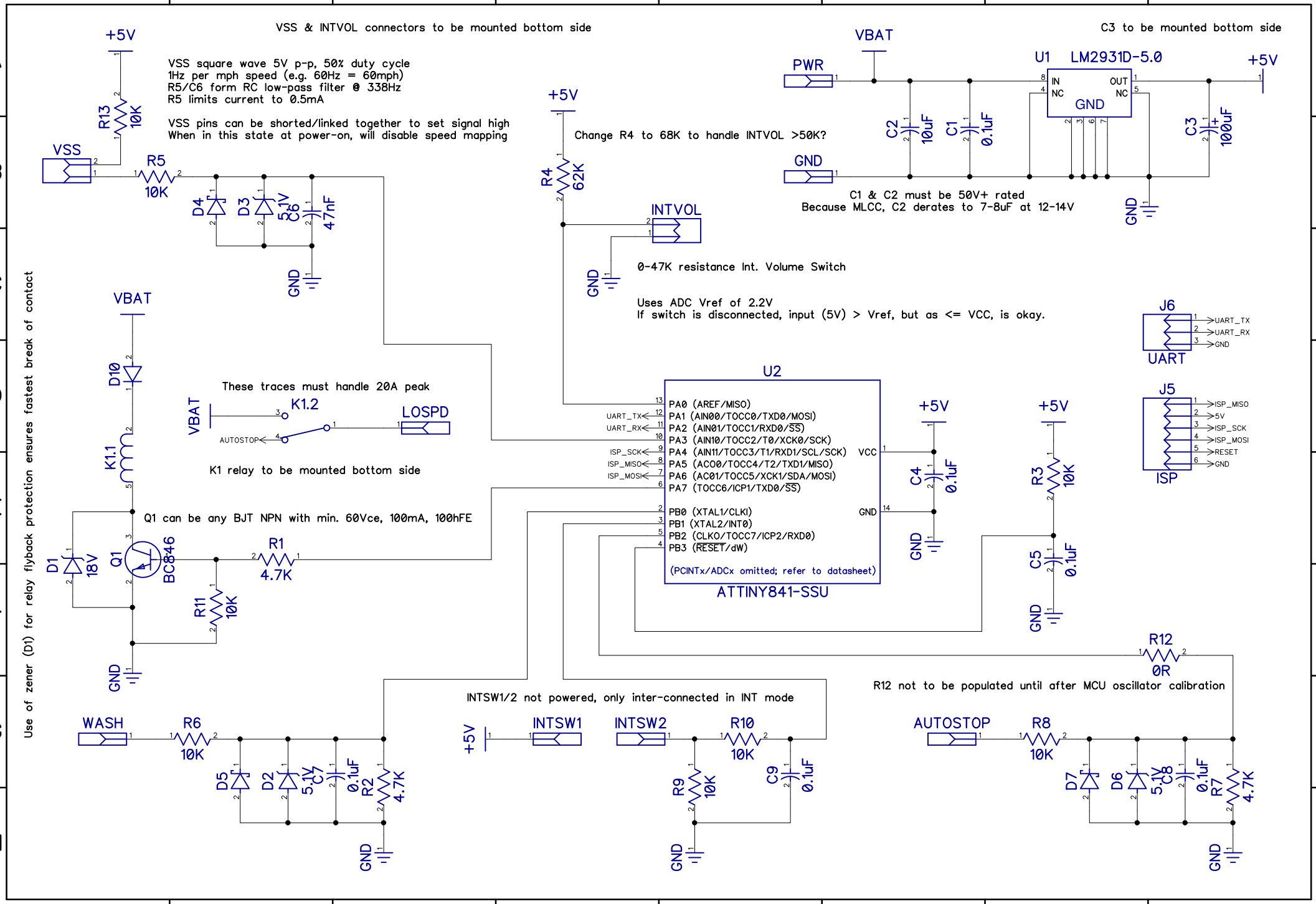
VSS & INTVOL connectors to be mounted bottom side
C3 to be mounted bottom side
VSS square wave 5V p-p, 50% duty cycle
1Hz per mph speed (e.g. 60Hz = 60mph)
R5/C6 form RC low-pass filter @ 338Hz
R5 limits current to 0.5mA
VSS pins can be shorted/linked together to set signal high
When in this state at power-on, will disable speed mapping
Change R4 to 68K to handle INTVOL >50K?
C1 & C2 must be 50V+ rated
Because MLCC, C2 derates to 7-8uF at 12-14V
0-47K resistance Int. Volume Switch
Uses ADC Vref of 2.2V
If switch is disconnected, input (5V) > Vref, but as <= VCC, is okay.
These traces must handle 20A peak
K1 relay to be mounted bottom side
Q1 can be any BJT NPN with min. 60Vce, 100mA, 100hFE
Use of zener (D1) for relay flyback protection ensures fastest break of contact
PA0 (AREF/MISO)
PA1 (AIN00/TOCC0/TXD0/MOSI)
PA2 (AIN01/TOCC1/RXD0/SS)
PA3 (AIN10/TOCC2/T0/XCK0/SCK)
PA4 (AIN11/TOCC3/T1/RXD1/SCL/SCK)
PA5 (ACO0/TOCC4/T2/TXD1/MISO)
PA6 (AC01/TOCC5/XCK1/SDA/MOSI)
PA7 (TOCC6/ICP1/TXD0/SS)
PB0 (XTAL1/CLKI)
PB1 (XTAL2/INT0)
PB2 (CLKO/TOCC7/ICP2/RXD0)
PB3 (RESET/dW)
(PCINTx/ADCx omitted; refer to datasheet)
ATTINY841-SSU
LM2931D-5.0
R12 not to be populated until after MCU oscillator calibration
INTSW1/2 not powered, only inter-connected in INT mode